BRAKES -ELECTROMAGNETIC DISC BRAKES

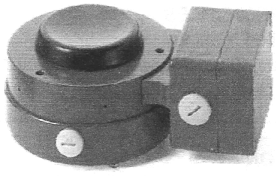

The spring applied electro-magnetic brake has proved itself in a great many applications. Designed for DC operation it can, with integral rectifier, be used with an AC single phase supply. Braking is effected by spring pressure with brake release being by way of the electro-magnetic field. Brake is therefore "fail safe". If required, brake can be manually operated (optional).

This brake is available in 6 sizes to cover braking torques from 8 to 360 Nm. All versions have the advantage of torque adjustment by means of a central adjusting collar. The brake design makes for easy modification to suit particular requirements e.g. to ccept tacho drive, flame or explosion proofing for mine duties or increased corrosion resistance. It can also be fitted with a micro switch to control brake operation.

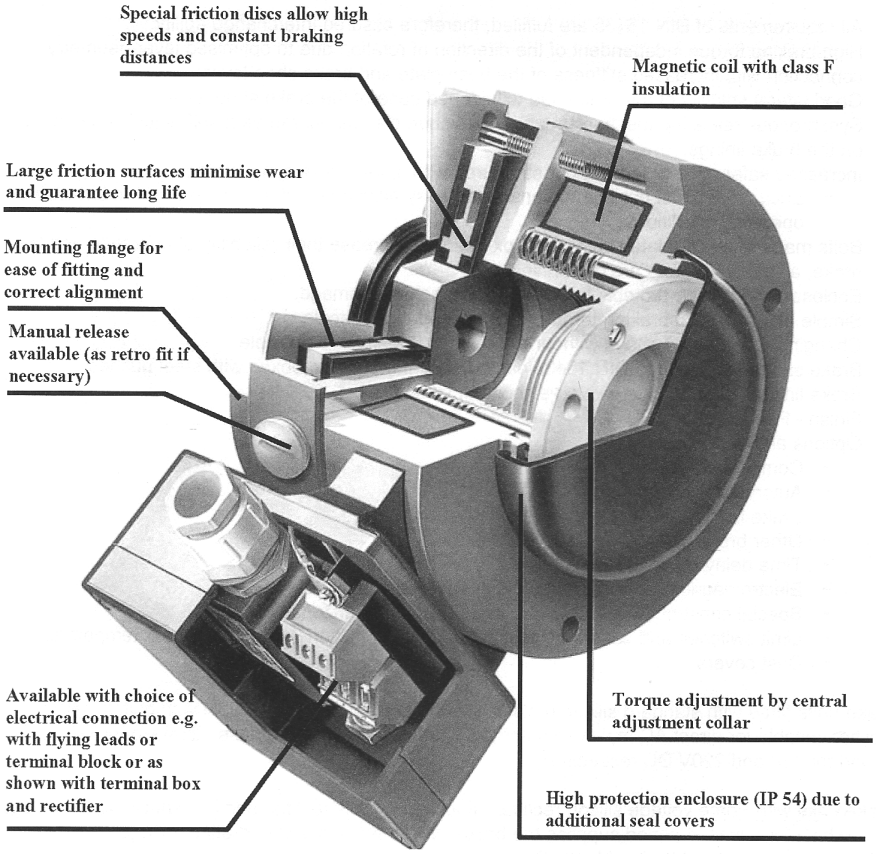

BRAKES - ELECTROMAGNETIC DRUM BRAKES

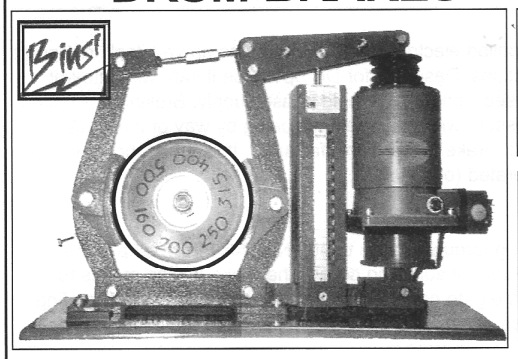

OPERATING PRINCIPLES

- Spring applied braking
- Releasing using electromagnetic Actuator.
- Adjustable braking torque

CONSTRUCTION

- Brake spring and brake lifter laterally positioned
- Brake shoe lifter with single web construction
- Synchronous releasing mechanism

SPECIAL CHARACTERISTICS OF THE BRAKE TYPE BINSI

- All requirements of DIN 15435 are fulfilled, therefore assured interchange ability.
- High braking torque independent of the direction of rotation due to optimised lever geometry in connection with increased stiffness of the base plate and brake shoe lever.
- Good lateral stability of the brake due to widened base of the brake shoe lever.
- Synchronous releasing mechanism and brake shoe clamps guarantee a self-adjusting constant gap on the brake linings.
- Increased safety due to tension bar structured with small stress concentration:
  - Encased tension bar threads enable an easy adjustment of the brake even under adverse operating conditions.
- Bolts made of electroplated steel and box bearings increase their reliability of operation and life of brake, all standard parts are galvanised.
- Enclosed spring tube protects the brake spring against damage.
- Simple adjustment of braking torque, easy to read torque scale.
- Changing of the brake shoes without dismantling the brake is possible.
- Brake shoes according to DIN 15435 casted of light metal and boxed with steel bushes.
- Brake linings, bonded type with co-efficient of friction of 0.4
- Finish - Pacific blue
- Options and accessories.:
  - Compensating shims
  - Automatic wear adjustment (AWA)
  - Brake lining riveted or bonded & riveted.
  - Other brake lining qualities available.
  - Time delay mechanism on request.
  - Electromagnetic actuator available in 100% and 40% duty cycles.
  - Special construction of assembly in hanging and horizontal positions.
  - Limit switches and control devices for releasing position, brake lining wear temperature etc.
  - Dust covers.

Brake units fitted with standard silicon rectifier attachment. Units are available with built-in silicon rectifier suitable for direct AC mains connections of 380 or 525V three phase. Brake operating coils are wound for 168 and 220V DC respectively.

Brake units with Force voltage silicon rectifier attachment. This rectifier unit is a special force voltage type, which for a limited period supplies the brake with its nominal DC operating voltage.
This reduces the normal brake release time by 40%.

ELECTROMAGNETIC DRUM BRAKES

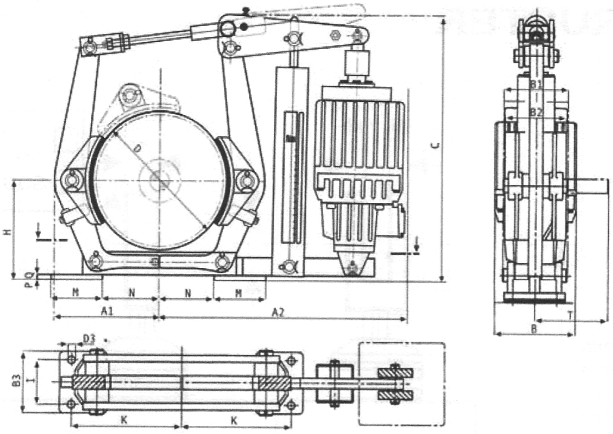

TECHNICAL DATA (dimensions in mm)

D1	Binsi	Braking Torque Nm	A1 max	A2 max	B max	C max	B1	B2	B3	D3	H	I	K	M	N	P	T	WEIGHT Kg*
160	160-14	55-230	145	385	160	400	66	55	90	12	130	55	120	70	75	8	78	22
200	200-14	85-400	180	430	160	475	75	70	80	14	160	55	145	90	85	10	105	36
250	250-14	100-850	210	485	160	510	130	90	110	18	190	65	180	80	119	10	140	51
315	315-14	75-1050	260	625	160	620	165	110	127	18	230	80	220	100	140	10	151	74
	315-16	90-1700	260	645	175	620	165	110	127	18	230	80	220	100	140	10	151	87
400	400-14	100-1100	322	760	160	710	175	140	160	22	280	100	270	120	178	12	190	119
	400-16	100-1800	322	770	180	710	175	140	160	22	280	100	270	120	178	12	190	130
	400-18	125-2750	322	780	200	710	175	140	160	22	280	100	270	120	178	12	190	139
500	500-14	200-1400	395	845	200	787	220	184	190	22	340	130	325	150	205	16	235	177
	500-16	200-2200	395	855	200	787	220	184	190	22	340	130	325	150	205	16	235	190
	500-18	200-3400	395	865	200	787	220	184	190	22	340	130	325	150	205	16	235	197
	500-20	200-5400	395	875	220	787	220	184	190	22	340	130	325	150	205	16	235	220

* ***Excluding actuator.***

Single acting Actuator Type: 41054 ... E with Mounting Flange & Terminal box

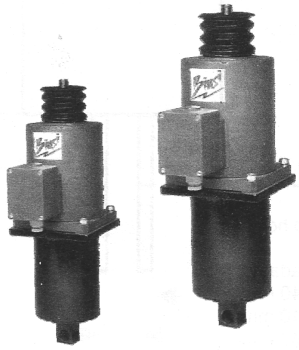

Size	Max stroke	More than 4 operations per second						4 operations per second					
		Force	Mag Stroke Time	Return Time DC Switched	Return Time AC Switched	Input Power	Force Type 41054	Mag	Return Time Stroke Time	Return Time DC Switched	Return Time AC Switched	Input Power	Force Type 41054
S mm	F N	t1 ms	t2 ms	T2 ms	P20 W	P20 WA	f N	Ti ms	t2 ms	t2 ms	P20 W	P20 WA	
14	50	250	600	180	500	160	215	300	500	160	425	260	375
16	60	340	650	210	-	235	-	440	550	190	-	380	-
18	65	500	770	260	-	270	-	650	630	230	-	450	-
20	70	750	850	320	-	360	-	1000	700	280	-	615	-

INFO FOR REPLACEMENT OF THRUSTER

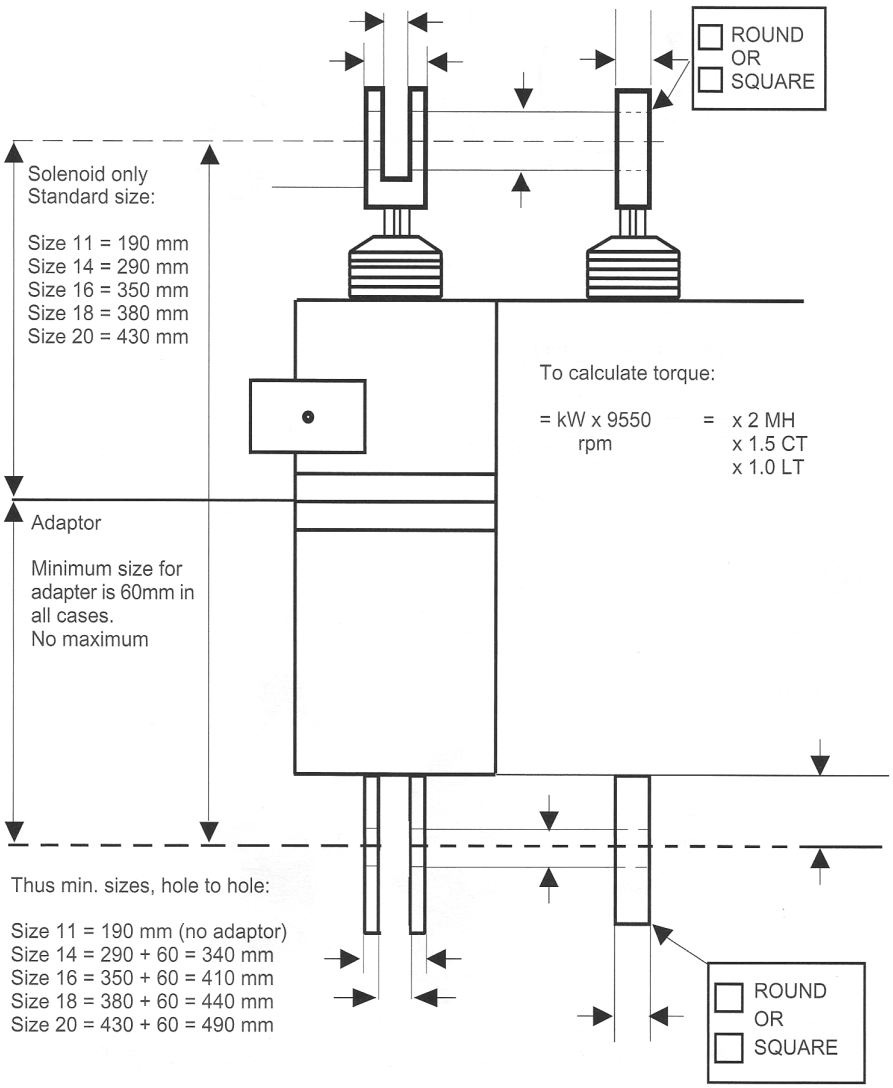

Voltage: _____ Motor Kw: _____

Brake Torque: _____ Motor RPM: _____

Brake Drum OD: _____ Drum Coupling: _____

RECTIFIERS

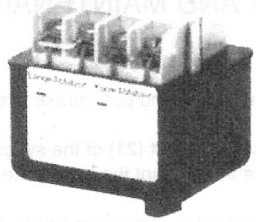

Type 32 173 50 C
Two Phase Recitifier
with Force Voltage feature
Protection to DIN 40 050: IP 00

Binsi Rectifier:

525V = 32 173 50 E28
380V = 32 173 50 E20

Dimensions (mm)

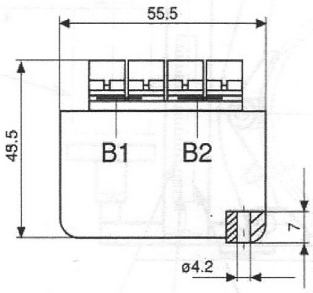

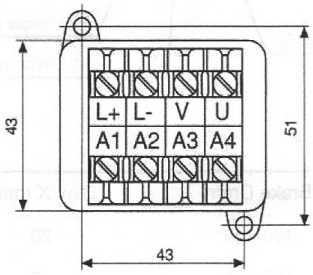

Connection Diagrams

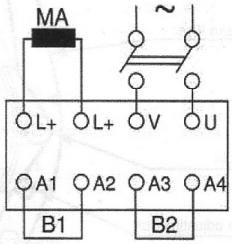

For Normal Field Decay

MA = Equipt. Operating Coil
B1 = Bridge

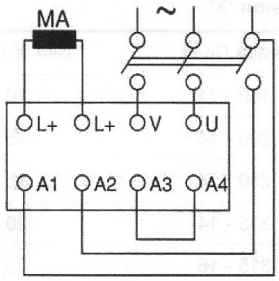

For Fast Field Decay

BRAKE SHOES

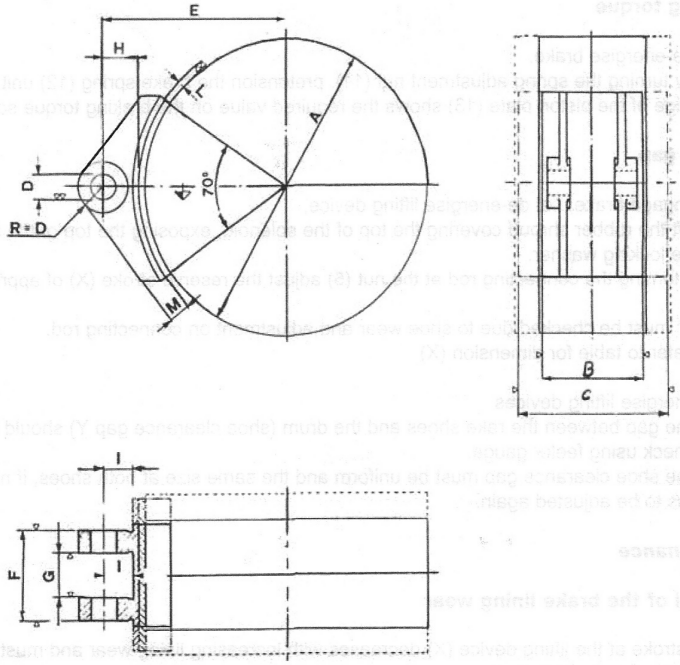

Size	A	B	C	D D10	E	F -Q2	G -Q2	H	I	L	M Max	Mass Kg	
160	160	55	85	16	115	52	28	29	23	6	13	0,65	0,80
200	200	70	105	20	140	65	35	32	24	8	17	1,15	1,45
250	250	90	135	25	170	80	40	37	29	8	22	2,15	2,60
315	315	110	165	30	212	100	50	44,5	34,5	10	25	3,90	4,80
400	400	140	210	35	260	125	62	50	40	10	30	6,00	7,45
500	500	180	270	40	320	160	80	58	46	12	33	10,6	13,3
630	630	225	335	45	390	200	100	63	51	12	38	17,6	21,7
710	710	225	380	50	440	224	112	70	51	15	40	24,5	31,2

Brake Shoes are manufactured according to DIN 15435. They are cast from LM25 aluminium Alloy, which gives them durability and makes them easy to handle due to their lightweight. The mounting holes are steel bushed to give them a long life.

The brake linings are made from Rolform Ferodo type HG1 with a friction coefficient of 0.4.

BINSI DRUM BRAKE

MOUNTING, ADJUSTMENT AND MAINTENANCE

1. *Installation*

- Remove base plate pin (3), swing arm (2) upwards and push brake over the brake drum shaft.
  For reinstallation of brake arm, insert the coupling bolt (21) of the synchronous lifting mechanism again into the bore of the brake arm, mount the base plate pin (3) again and secure it via circlip.
- (De-energise the brake and) adjust it towards sides and height so that the brake drum axis is in the middle between the brake and shoes (6) and that the brake drum protrudes uniformly at both sides of the brake shoes.
- Underlay the base plate (1) with suitable shims and tighten it with screws at the connecting construction.

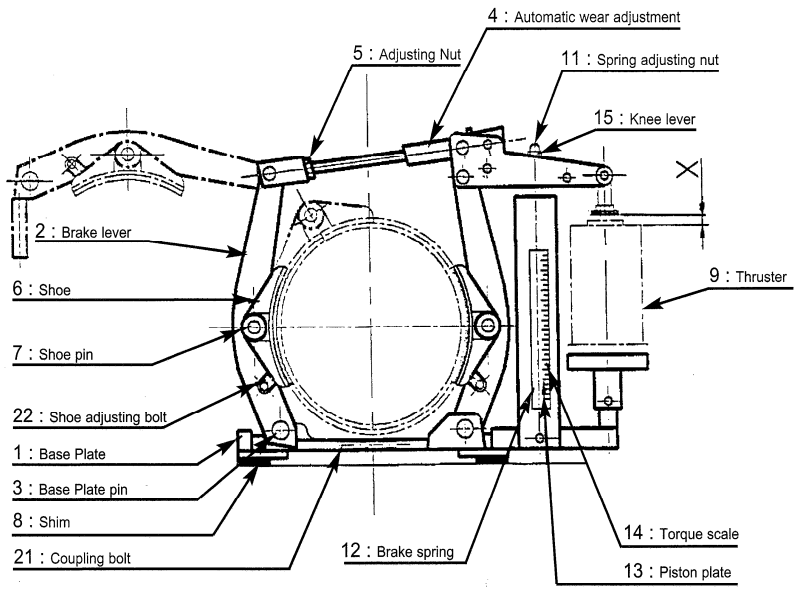

Dimension 'X'

Brake Drum	Dim 'X (mm)	Brake Drum	Dim 'X (mm)
160 - 14	10	400 - 14	20
200 - 14	15	400 - 16	20
250 - 14	15	400 - 18	20
315 - 14	20	500 - 16	20
315 - 16	20	500 - 18	25
		500 - 20	30

2. *Adjustment*

2.1 Braking torque

- De-energise brake.
- By turning the spring adjustment nut (11), pretension the brake spring (12) unit the upper edge of the piston plate (13) shows the required value on the braking torque scale (14).

2.2 Lifting gap

- Engage brake, i.e. de-energise lifting device,
- Lift the rubber shroud covering the top of the solenoid, exposing the top of the lifting rod and the locking washer.
- Y turning the connecting rod at the nut (5) adjust the reserve stroke (X) of approx.

  'X' must be checked due to shoe wear and adjustment on connecting rod.
  Refer to table for dimension (X)

- Energise lifting devices
- The gap between the rake shoes and the drum (shoe clearance gap Y) should be 0,3 mm. Check using feeler gauge.
- The shoe clearance gap must be uniform and the same size at both shoes, if not, the brake has to be adjusted again.

3. *Maintenance*

3.1 Control of the brake lining wear

The reserve stroke at the lifting device (X) decreases with increasing lining wear and must therefore be regularly controlled and readjusted.
If the reserve stroke at the lifting device has decreased to the half of the desired value, the brake must be readjusted as described under 2,2,

3.2 Replacement of the brake shoes

When reaching the minimum lining thickness of approx. 3 to 5 mm, the worn-out brake linings must be replaced. For this purose, the brake must not be dismantled if the following instructions are adhered to:

- Energise Lifting Device.
- Release brake shoe pin (7) after removing the cotter pin/circlips and pivot the brake.shoe (6) out upwards.
- Open the brake by turning at the nut (5) of the connecting rod so that the new brake shoe can be installed in reverse sequence.
- Readjust lifting gap as per item 2.2.
- Control adjustment of braking torque (item 2.1) and correct it if necessary.

Attention

Brakes with new brake lining need a running process in order to get an adequate contact pattern of the friction surface and to reach the full braking torque. The braking effect can be reduced in this phase and an increased wear of brake lining can occur.

Drum Brakes according to DIN 15435
With Hydraulic Thrusters

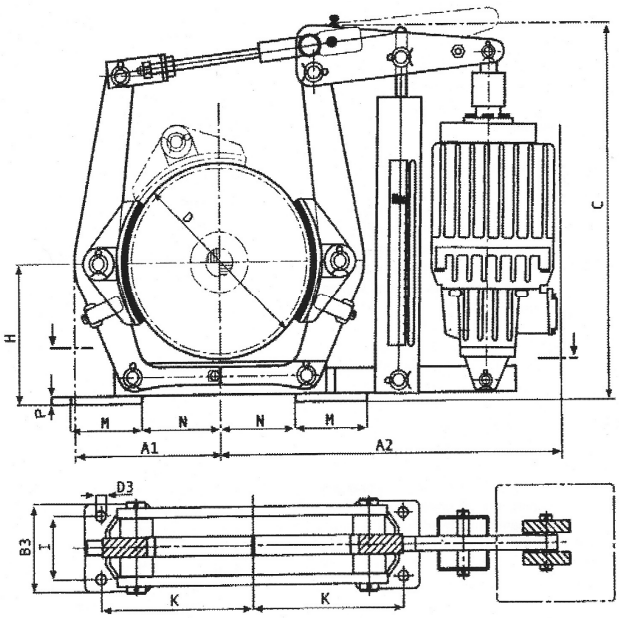

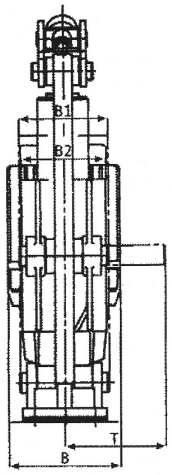

Technical data (dimensions in mm)

D1 Brake Size	Thruster EB	Braking Torque (Nm) μ=0.4	A1 max.	A2 max.	B max.	C max.	B1	B2	B3	D3	H	I	K	M	N	P	T	WEIGHT without Thruster ca.kg*
160	120/4	45 - 125	150	425	110	400	66	55	90	11	130	55	120	70	75	15	73	22
160	220/5	55 - 230	150	460	160	400	66	55	90	11	130	55	120	70	75	15	100	22
200	220/5	50 - 300	170	470	160	475	75	70	90	14	160	55	145	90	85	10	115	19
250	220/5	40 - 325	210	550	160	550	95	90	110	18	190	65	180	100	105	10	133	30
250	300/5	40 - 450	210	550	160	550	95	90	110	18	190	65	180	100	105	10	133	30
315	220/5	70 - 420	260	625	160	650	118	110	125	18	230	80	220	110	135	10	160	50
315	300/5	70 - 550	260	625	160	650	118	110	125	18	230	80	220	110	135	10	160	50
315	500/6	75 - 1050	260	665	195	660	118	110	125	18	230	80	220	110	135	10	160	50
315	800/6	90 - 1700	260	665	195	660	118	110	125	18	230	80	220	110	135	10	160	50
400	300/5	80 - 575	310	720	160	765	150	140	160	22	280	100	270	120	180	12	199	85
400	500/6	100 - 1100	310	765	195	775	150	140	160	22	280	100	270	120	180	12	199	85
400	800/6	100 - 1800	310	765	195	775	150	140	160	22	280	100	270	120	180	12	199	85
400	1250/6	125 - 2750	310	765	240	775	150	140	160	22	280	100	270	120	180	12	199	85
500	800/6	200 - 2200	385	840	195	870	190	180	190	22	340	130	325	140	220	13	242	130
500	1250/6	200 - 3400	385	830	195	870	190	180	190	22	340	130	325	140	220	13	242	130
500	2000/6	200 - 5400	385	830	240	870	190	180	190	22	340	130	325	140	220	13	242	130
630	1250/6	500 - 3300	465	900	240	1000	236	225	250	27	420	170	400	160	285	15	295	206
630	2000/6	500 - 5500	465	900	240	1000	236	225	250	27	420	170	400	160	285	15	295	206
630	3000/6	500 - 8200	465	900	240	1000	236	225	250	27	420	170	400	160	285	15	295	206
710	1250/6	500 - 3800	525	975	240	1100	265	255	270	27	470	190	450	180	320	15	332	268
710	2000/6	500 - 6300	525	975	240	1100	265	255	270	27	470	190	450	180	320	15	332	268
710	3000/6	500 - 9400	525	975	240	1100	265	255	270	27	470	190	450	180	320	15	332	268

size	type	s	b_1 +2	b_2 +1	□ b_3 -0.1	b_4	b_5	b_6	b_7	d_1 +0.1	d_2 F9	h_1 ±0.1	h_2	h_3 +1	h_4 ±0.1	h_5	d_3 H11	b_8 +1	h_6
Series acc. to DIN 15430																			
0	EB 120 -2[2]	40	25	45	20	110	100	178	55	12.1	12	265	12	14	20	10	–	–	–
	EB 120 -3[3]	40	40	60	20	110	100	178	55	16.1	12	286	16	23	20	10	–	–	–
	EB 220 -1[1]	50	–	–	20	162	81	236	100	16.1	12	272	–	–	26	15	–	–	–
	EB 220 -2[2]	50	40	80	20	162	81	236	100	16.1	12	286	20	16	26	15	16	104	–
	EB 220 -3[2]	50	40	80	20	162	81	236	100	16.1	12	314	38	16	26	20	20	104	–
1	EB 300	50	40	80	25	150	97	200	100	16.1	16	370	18	16	32	15	16	104	21
2	EB 500	60	60	120	30	180	102	220	100	20.1	20	435	30	20	67	18	20	144	46
	EB 500	120	60	120	30	180	102	220	100	20.1	20	515	30	20	95	18	20	144	59
3	EB 800	60	60	120	30	208	102	232	100	20.1	20	458	23	22	42	18	20	144	24
	EB 800	120	60	120	30	208	102	232	100	20.1	20	530	23	22	39	18	20	144	24
	EB 1250	60	40	90	40	208	102	232	100	25.1	25	645	30	25	108	25	25	114	88
	EB 1250	120	40	90	40	208	102	232	100	25.1	25	705	30	25	168	25	25	114	78
4	EB 2000	60	40	90	40	250	110	265	100	25.1	25	645	30	25	132	25	25	114	107
	EB 2000	120	40	90	40	250	110	265	100	25.1	25	705	30	25	81	25	25	114	56
	EB 3000	60	40	90	40	250	110	265	100	25.1	25	660	30	25	36	25	25	114	29
	EB 3000	120	40	90	40	250	110	265	100	25.1	25	705	30	25	81	25	25	114	61
5	EB 6300	120	40	90	40	250	110	265	100	25.1	25	705	30	25	83	25	25	114	63
Special versions following DIN 15430																			
2	EB 320	50	40	80	25	180	102	220	100	16.1	16	385	18	16	30	18	16	104	46
	EB 320	100	40	80	25	180	102	220	100	16.1	16	493	18	16	85	18	16	104	39
	EB 500	50	60	120	30	180	102	220	100	20.1	20	435	30	20	65	18	20	144	46
	EB 500	100	60	120	30	180	102	220	100	20.1	20	515	30	20	95	18	20	144	59
3	EB 800	160	60	120	30	208	102	232	100	20.1	20	573	23	22	42	18	20	144	29
	EB 1250	160	40	90	40	208	102	232	100	25.1	25	705	30	25	168	25	25	114	78
	EB 1500	60	40	90	40	208	102	232	100	25.1	25	645	30	25	108	25	25	114	88
	EB 1500	160	40	90	40	208	102	232	100	25.1	25	705	30	25	168	25	25	114	88
4	EB 2500	60	40	90	40	250	110	265	100	25.1	25	645	30	25	152	25	25	114	107
	EB 2500	160	40	90	40	250	110	265	100	25.1	25	705	30	25	81	25	25	114	56
	EB 3200	100	40	90	40	250	110	265	100	25.1	25	660	30	25	36	25	25	114	29

size	type	b_3	b_5	b_9	b_{10}	d_2 F9	h_7	h_8	h_9	Z
Attenuation spring (series acc. to DIN 15430/special versions following to DIN 15430)										
0	EB 220 – 50	20	68	78	52	12	36	20	89	15
1	EB 300 – 50	25	68	78	52	16	30	20	75	15
2.3	EB 320 – 50, 320 – 100 EB 500 – 50, 500 – 100 EB 500 – 60, 500 – 120 EB 800 – 60, 800 – 120, 800 – 160	30	68	78	52	20[4]	36[5]	20	100	20[3]
3.4	EB 1250 – 60, 1250 – 120, 1250 – 160 EB 1500 – 60, 1500 – 160 EB 2000 – 60, 2000 – 120 EB 2500 – 60, 2500 – 160 EB 3000 – 60, 3000 – 120 EB 3200 – 100	40	110	116	76	25	38	35	175	20

[1]) flange mounting version
[2]) thruster with cast-on eyes
[3]) thruster with bolted bottom plate
[4]) EB 320 – 50 h_7 = 30mm, d_2 = 16mm
[5]) EB 320 – 50 und 500 – 50 z = 15 mm

dimensions in mm

Brake Drums acc. to DIN 15431

Dimensions and technical data

PINTSCH BUBENZER

Rev. 05-08

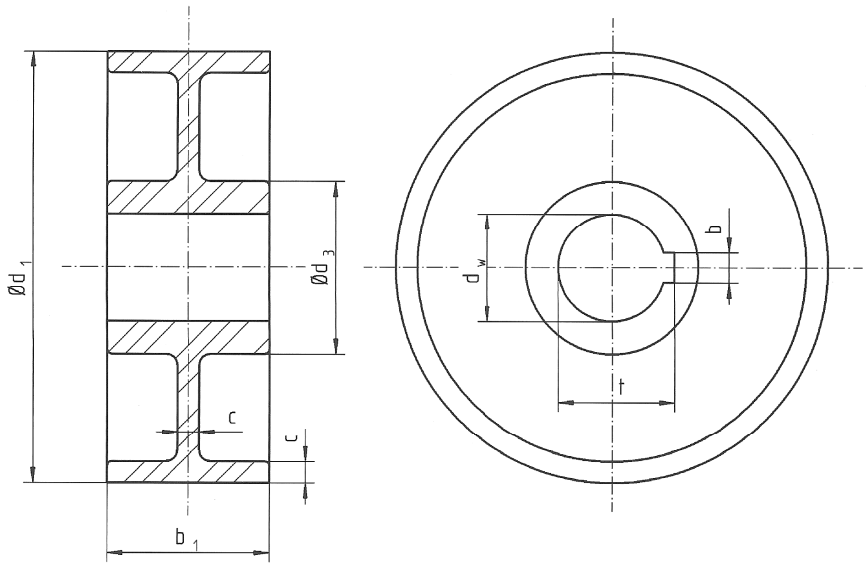

Material options:	GG25
	GGG40
	St 52 welded
	C45
When ordering please indicate:	Brake drum Ø d_1
	Material
	Bore Ø d_2

All dimensions in mm
Alterations reserved without notice

d_1	b_1	c	d_2 pilot bored	d_2 max. ready bored	d_3	Moment of inertia J kgm²	Weight kg (GGG)	Nominal heat capacity W_{n150} (kJ) St/GS	GG	GGG
200	75	10	20	50	80	0,039	7,4	264	273	371
250	95	12	25	60	95	0,1156	13,7	502	519	707
315	118	15	30	80	115	0,3585	26,4	982	1016	1383
400	150	17	35	90	130	1,0687	47,3	1806	1869	2544
500	190	20	50	100	150	3,1162	85,3	3374	3490	4751
630	236	25	50	110	170	9,6564	161,7	6602	6831	9217
710	265	30	70	120	200	18,4627	243,1	9999	10345	14080

The brake drums can be balanced on request if ordered ready bored and keywayed. If requested, brake drums can be made according to customer specifications.

Thruster Disc Brakes SB 8 Series

PINTSCH BUBENZER

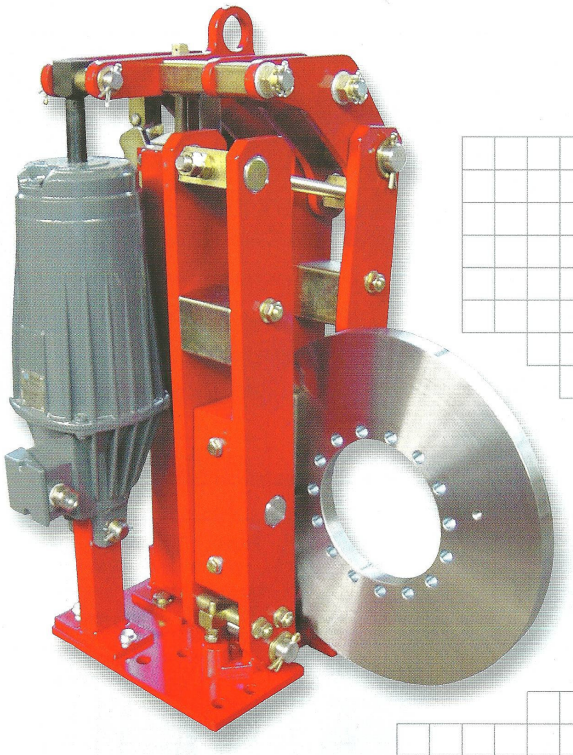

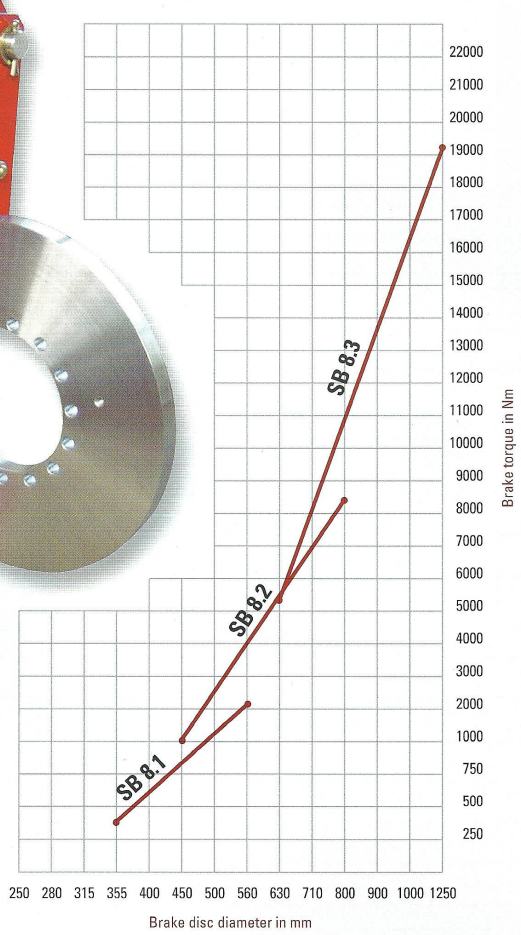

PINTSCH BUBENZER
is certified according to
DIN EN ISO 9001:2000

Reliable | Compact Design | Robust Construction | Easy Maintenance

Description SB 8

PINTSCH BUBENZER

Main Features - Steel Mill Execution

- Very compact dimensions
- Thrusters for high ambient temperatures in steel mills
- Wear resistant linings
- Adjustable, enclosed brake spring with torque scale
- Stainless steel pins and spindles
- Maintenance free bushings in all hinge points
- Right or Left hand design

Options

- Heavy-duty designed automatic wear compensator (dust-proof)
- Heat resistant wiring of limit switches
- Limit switch release control (special execution)
- Limit switch wear control (special execution)
- Limit switch manual release (special execution)
- Manual release lever with or without stop
- Monitoring systems (e.g. VSR)
- Brake discs with hubs or couplings

Ordering Example

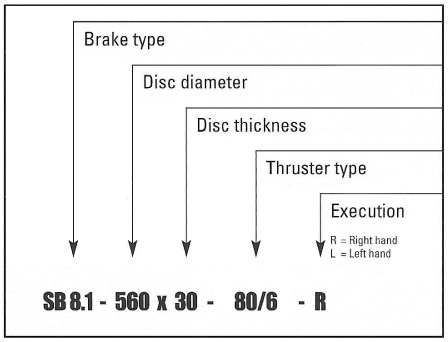

Thrusters, Technical Data

Thruster Type	Power (W)	Curr. (A) at 400 V	Weight (kg)
Ed 30/5	200	0,5	14
Ed 50/6	210	0,5	23
Ed 80/6	330	1,2	24
Ed 121/6	330	1,2	39
Ed 201/6	450	1,3	39
Ed 301/6	550	1,4	40

Data supplied by thruster manufacturer, please take higher start current into consideration, fuses to be minimum 2A

Disc Brake SB 8.1

Dimensions and technical data

PINTSCH BUBENZER

Rev. 03-09

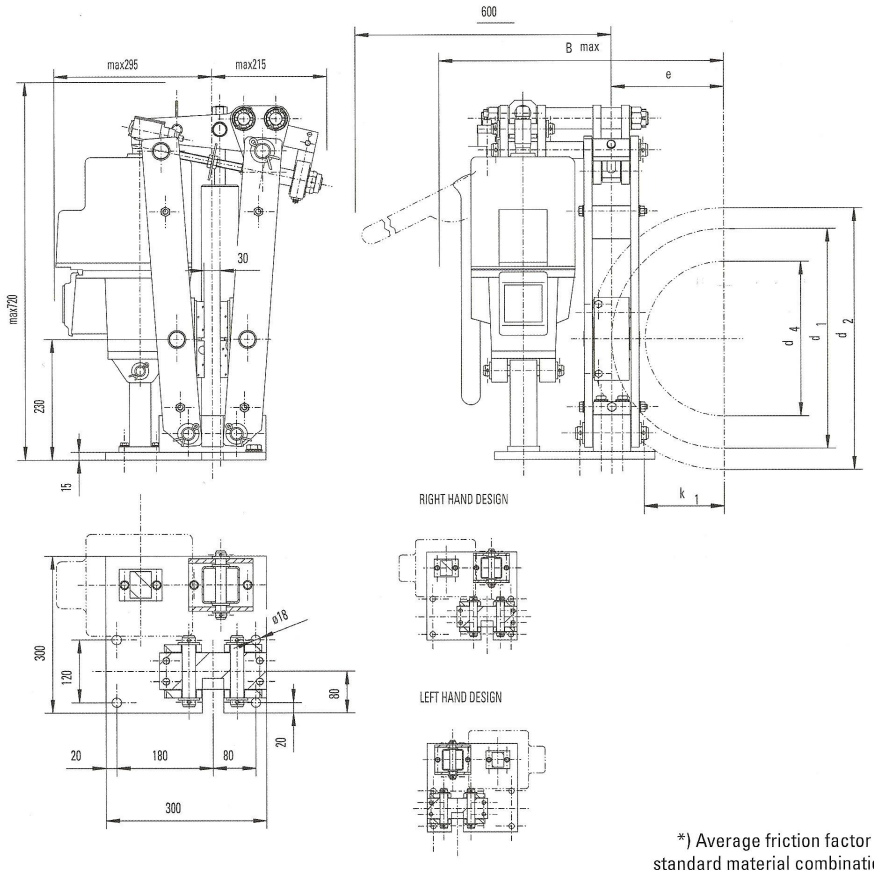

*) Average friction factor of standard material combination

For crane brake lay-out use safety factors documented in the FEM 1.001, Section 1

All dimensions in mm
Alterations reserved without notice

Weight: 78 kg w/o thruster		Thruster type				Ed 30/5	Ed 50/6	Ed 80/6
		Contact force in N				4000	6100	10500
Disc Ø	Friction Ø					Brake torque M_{Br} in Nm		Friction factor $\mu = 0{,}4$*
d_2	d_1	d_4	e	k_1	Bmax			
355	275	160	138	78	430	450	650	1150
400	320	205	160	100	457	500	800	1350
450	370	255	185	125	482	600	900	1550
500	420	305	210	150	507	670	1000	1750
560	480	365	240	180	537	770	1150	2000

Disc Brake SB 8.2

Dimensions and technical data

PINTSCH BUBENZER

Rev. 10-08

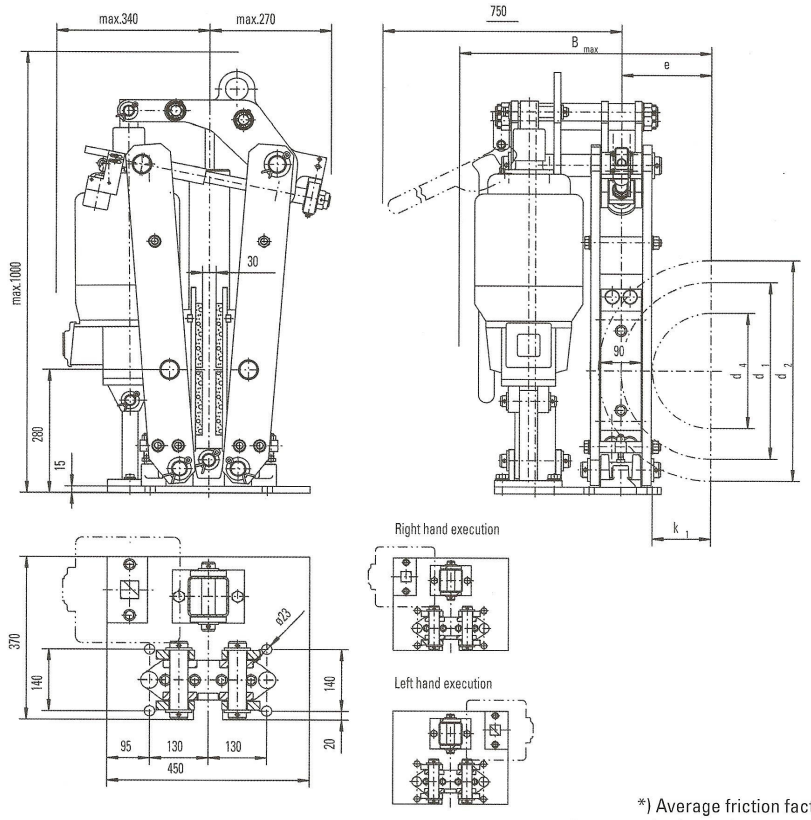

*) Average friction factor of standard material combination

For crane brake lay-out use safety factors documented in the FEM 1.001, Section 1

All dimensions in mm
Alterations reserved without notice

Weight: 180 kg w/o thruster		Thruster type				Ed 50/6	Ed 80/6	Ed 121/6	Ed 201/6
		Contact force in N				7300	12300	19300	30000
Disc Ø	Friction Ø					Brake torque M_{Br} in Nm		Friction factor $\mu = 0{,}4$*	
d_2	d_1	d_4	e	k_1	Bmax				
450	350	200	175	105	540	1000	1700	2700	4200
500	400	250	200	130	575	1200	2000	3100	4800
560	460	310	230	160	605	1400	2300	3600	5500
630	530	380	265	195	640		2600	4100	6400
710	610	460	305	235	680			4700	7300
800	700	550	350	280	725			5400	8400

Flexible Coupling Type K

PINTSCH BUBENZER

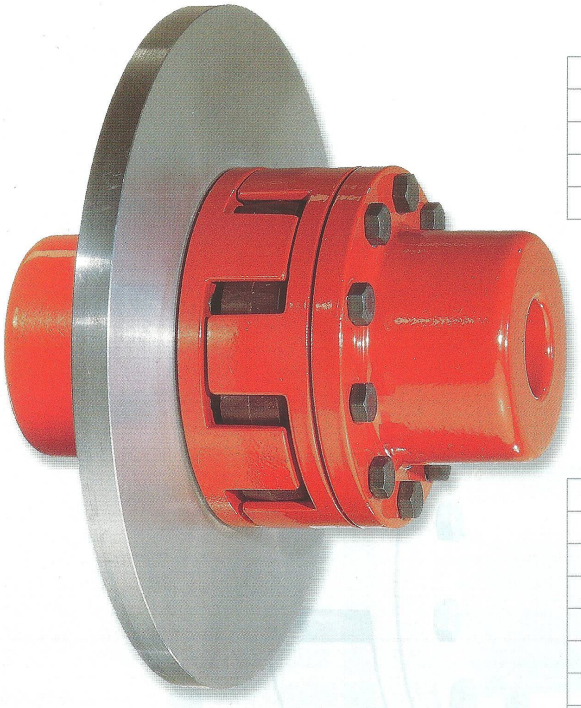

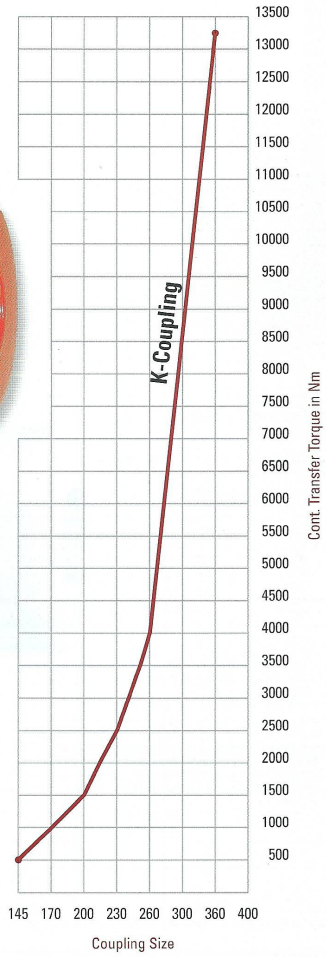

PINTSCH BUBENZER
is certified according to
DIN EN ISO 9001:2000

Torsionally Elastic

Tried and Trusted

High Performance

Robust

Easy Maintenance

Description Coupling Type K

PINTSCH BUBENZER

Main Features

- Four component steel coupling, torsionally elastic and puncture-proof
- Transmission of torque via elastic intermediate ring
- Replacement of the elastic intermediate ring or the brake disc without disturbing any equipment
- Arrangement of the brake disc on the load side to allow the brake torque to be maintained when the motor is disengaged
- Extensive selection of coupling sizes and brake disc diameters to satisfy most braking and drive requirements

Options

- Coupling hubs ready bored and keywayed (preferably acc. to DIN 6885)
- Coupling hubs tapered bored
- Coupling hubs with double keyway
- Coupling hubs pilot bored
- Coupling balanced according to ISO 1940-Grade: G 6.3
- Special material for elastic intermediate ring according to application
- Coupling without brake disc

Ordering Example

Coupling size
Disc diameter
Disc thickness
Bore dia. motor side
Bore dia. gear side

K 230 - 500 x 30 - M85 / G90

Applications

- The design of these couplings makes them particularly suitable in machinery subjected to high dynamic stress
- Damping of peak torques and vibrations as well as electrical insulation between motor and gearbox are further reasons for the use of this coupling type
- The standard material of the elastic intermediate ring (Vk60D, polyurethane) is suitable for a temperature range of -30°C...+60°C

Please Note

We supply a detailed operating manual with every order. Couplings are rotating parts and as such a cover must be fitted for the prevention of accidents.

PINTSCH BUBENZER Service

This includes the verification of the coupling selection, if required. A detailed questionnaire is provided for this purpose. Installation, commissioning and alignment by a laser system on site is possible by PINTSCH BUBENZER service engineers. Drawings as DWG/DXF files for your engineering department are available upon request.

Flexible Coupling Type B-EBT + B-GBT

PINTSCH BUBENZER

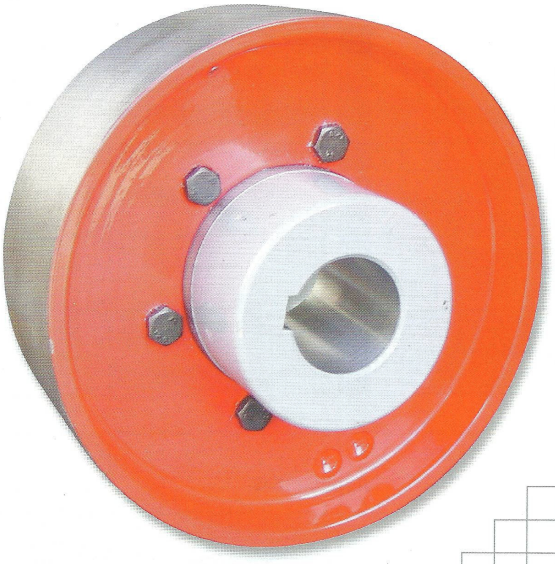

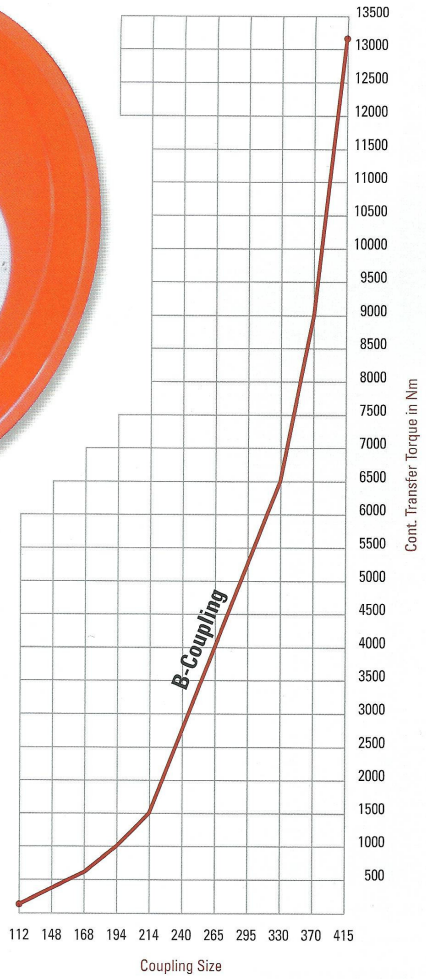

PINTSCH BUBENZER
is certified according to
DIN EN ISO 9001:2008

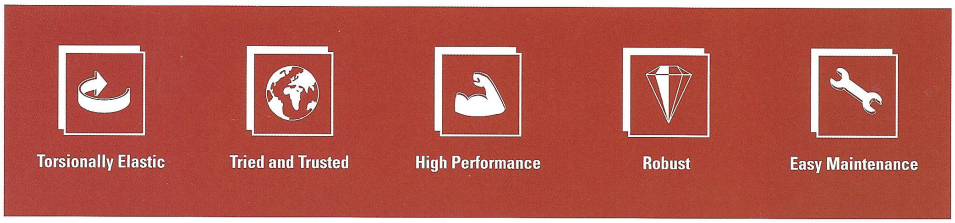

Description Coupling Type B-EBT, B-GBT

PINTSCH BUBENZER

Main Features

- Multi component GG / GGG coupling, torsionally elastic and puncture-proof
- Transmission of torque via elastic intermediate ring
- Replacement of the elastic intermediate ring without disturbing any equipment (B-GBT only)
- Arrangement of the brake drum on the load side to allow the brake torque to be maintained when the motor is disengaged
- Extensive selection of coupling sizes and brake drum diameters to satisfy most braking and drive requirements

Options

- Coupling hubs ready bored and keywayed (preferably acc. to DIN 6885)
- Coupling hubs tapered bored
- Coupling hubs with double keyway
- Coupling hubs pilot bored
- Coupling balanced according to ISO 1940-Grade: G 6.3
- Special material for elastic intermediate ring according to application
- Coupling without brake drum

Ordering Example

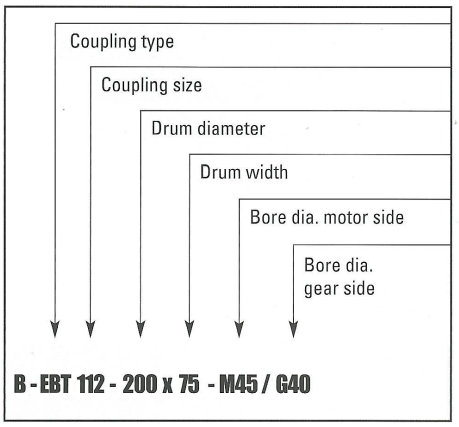

Applications

- The design of these couplings makes them particularly suitable in machinery subjected to high dynamic stress
- Damping of peak torques and vibrations are further reasons for the use of this coupling type
- The standard material of the elastic intermediate ring is suitable for a temperature range of -20°C...+80°C

Flexible Coupling Type B-EBT

Dimensions and technical data

PINTSCH BUBENZER

Rev. 12-06

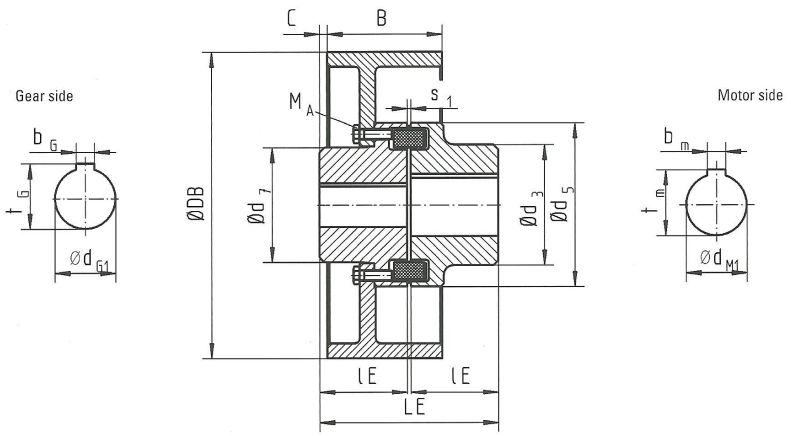

All dimensions in mm
Alterations reserved without notice

B-EBT (= d_5)		112	128	148	168	194	214	240	265	295	330	370	415
M_{Br} max.	Nm	450	550	1000	1600	2750	3350	4200	8700	9800	10600	13500	16000
T_{KN}	Nm	150	250	390	630	1050	1500	2400	3700	4900	6400	8900	13200
n_{max}	min^{-1}	6000	5000	4500	4000	3500	3000	2750	2500	2250	2000	1750	1500
d_{M1} max.	mm	48	55	65	75	85	95	110	120	130	150	170	190
d_{G1} max.	mm	42	52	58	72	85	92	102	120	130	150	170	185
d_3	mm	79	90	107	124	140	157	179	198	214	248	278	315
d_7	mm	68	85	94	118	138	153	168	198	214	248	278	308
C	mm	11	16	16	*A	16,5	*B	*C	22	*D	*E	15	25
lE	mm	60	70	80	90	100	110	120	140	150	160	180	200
LE	mm	123,5	143,5	163,5	183,5	203,5	224	244	285,5	308	328	368	408
S_2	mm	3,5±1	3,5±1	3,5±1	3,5±1,5	3,5±1,5	4±2	4±2	5,5±2,5	8±2,5	8±2,5	8±2,5	8±2,5
M_A	Nm	25	25	49	49	85	85	85	210	210	210	210	210

Brake drum diameter DB x B (mm)	112	128	148	168	194	214	240	265	295	330	370	415
200 x 75	9,1 / 0,038	12,3 / 0,044										
250 x 95			20,2 / 0,116	26,4 / 0,14								
315 x 118				32,9 / 0,3511	40,4 / 0,39	49,2 / 0,45						
400 x 150						63,4 / 1,056	72,6 / 1,145					
500 x 190							96,6 / 2,795	116,8 / 2,99	133,9 / 3,3			
630 x 236									192,9 / 8,67	236,5 / 9,15		
710 x 265										264,5 / 15,26	313,8 / 16,22	381,1 / 17,77

Weight / Moment of inertia of the coupling with brake drum — kg / kgm^2

*A Dimension C = 19 mm at Ø 250 mm, 8 mm at Ø 315 mm
*B Dimension C = 19 mm at Ø 315 mm, 12,5 mm at Ø 400 mm
*C Dimension C = 18 mm at Ø 400 mm, 9 mm at Ø 500 mm
*D Dimension C = 30 mm at Ø 500 mm, 5 mm at Ø 630 mm
*E Dimension C = 11 mm at Ø 630 mm, 0 mm at Ø 710 mm

Flexible Coupling Type B-GBT

Dimensions and technical data

PINTSCH BUBENZER

Rev. 12-09

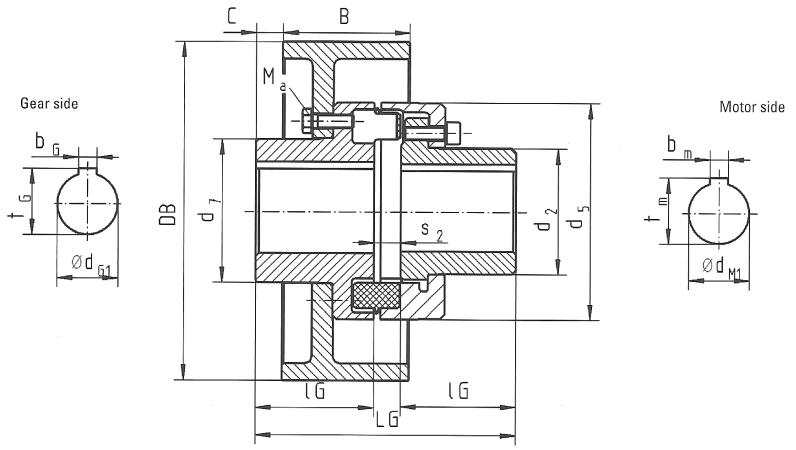

All dimensions in mm
Alterations reserved without notice

B-GBT (= d_5)		112	128	148	168	194	214	240	265	295	330	370	415
M_{Br} max.	Nm	450	550	1000	1600	2750	3350	4200	8700	9800	10600	13500	16000
T_{KN}	Nm	150	250	390	630	1050	1500	2400	3700	4900	6400	8900	13200
n_{max}	min^{-1}	6000	5000	4500	4000	3500	3000	2750	2500	2250	2000	1750	1500
d_{M1} max.	mm	46	53	65	75	85	95	100	115	130	135	160	180
d_{G1} max.	mm	42	52	58	72	85	92	102	120	130	150	170	185
d_2	mm	64,5	74,5	92,5	104,5	121,5	135,5	146	164	181	208	241	275
d_7	mm	68	85	94	118	138	153	168	198	214	248	278	308
C	mm	11	16	16	*A	16,5	*B	*C	22	*D	*E	15	25
IG	mm	58	68	78	87	97	107	117	137	147	156	176	296
LG	mm	133	154	176	198	221	243	267	310	334	356	399	441
S_2	mm	15±1	16±1	18±1	21±1,5	24±1,5	26±2	30±2	33±2	37±2,5	40±2,5	43±2,5	45±2,5
M_A	Nm	25	25	49	49	85	85	85	210	210	210	210	210

Brake drum diameter DB x B (mm)

Weight / Moment of inertia of the coupling with brake drum — kg / kgm²

200 x 75	9,1 / 0,038	12,4 / 0,045										
250 x 95			20,2 / 0,12	26,4 / 0,15								
315 x 118				32,9 / 0,353	40,9 / 0,396	49,2 / 0,46						
400 x 150						63,4 / 1,065	71,7 / 1,157					
500 x 190							95,7 / 2,807	115,9 / 3,014	133,7 / 3,26			
630 x 236	*A Dimension C = 19 mm at Ø 250 mm, 8 mm at Ø 315 mm *B Dimension C = 19 mm at Ø 315 mm, 12,5 mm at Ø 400 mm *C Dimension C = 18 mm at Ø 400 mm, 9 mm at Ø 500 mm *D Dimension C = 30 mm at Ø 500 mm, 5 mm at Ø 630 mm *E Dimension C = 11 mm at Ø 630 mm, 0 mm at Ø 710 mm								192,7 / 8,63	233,1 / 9,183		
710 x 265										261,1 / 15,29	310,8 / 16,28	379,5 / 17,9

Flexible Coupling Type K

Dimensions and technical data

PINTSCH BUBENZER

Rev. 12-06

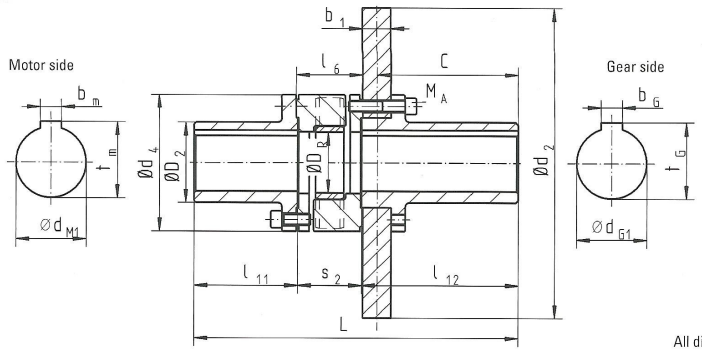

All dimensions in mm
Alterations reserved without notice

Coupling K (size = d_4)		145	170	200	230	260	300	360	400
M_B, max.	Nm	1800	2850	4950	7740	11940	17550	29100	40050
T_{KN}	Nm	600	950	1650	2580	3980	5850	9700	13350
n_{max} at max. disc Ø	min^{-1}	3800	3400	3000	2700	2400	2200	1750	1750
d_WM max. + d_WG max.	mm	65	75	95	110	125	140	160	160
D_2	mm	92	110	135	160	180	200	225	225
D_R	mm	64	90	100	115	140	162	215	250
L	mm	344,5	374,5	454	458,5	518,5	535,5	627,5	627,5
l_{11}	mm	110	140	170	170	210	210	250	250
l_{12}	mm	166,5	166,5	207	207,5	212,5	212,5	252,5	252,5
l_6	mm	71	71	81	86	101	118	130	130
S_2	mm	68	68	77	81	96	113	125	125
C	mm	150	150	190	190	195	195	235*	235*
M_A	Nm	84	84	132	132	206	410	710	710

Brake disc diameter d_2 x b_1 (mm)									
	355 x 30	41			Weight / Moment of inertia of the coupling with brake disc				kg / kgm^2
		0,3973							
	400 x 30	47	54	76					
		0,6219	0,656	0,801					
	450 x 30	55	62	84					
		0,9781	1,016	1,158					
	500 x 30		71	93	116	139			
			1,513	1,655	1,782	2,123			
	560 x 30			105	128	150			
				2,484	2,611	2,96			
	630 x 30				143	168	189		
					3,98	4,33	4,704		
	710 x 30					185	225		
						6,563	6,92		
	800 x 30	Weights and moments of inertia are not binding, referring to the max. finish bore for the sizes 145 to 300 respectively for a finish bore of 120 mm for the sizes 360 and 400.					250	311	
							10,52	11,49	
	900 x 30							342	354
								17,21	17,69
	1000 x 30	* Dimension C = 230 mm at brake disc thickness 40 mm						376	389
								25,16	25,65

Flexible Coupling Type K

Design and permissible misalignments

PINTSCH BUBENZER

Rev. 09-02

Design

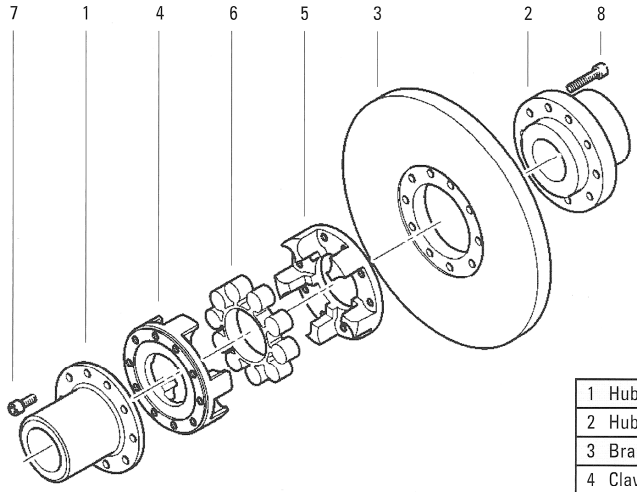

1	Hub, motor side
2	Hub, gear side
3	Brake disc
4	Claw ring, removable
5	Claw ring, removable
6	Elastic intermediate ring
7	Socket head screws
8	Socket head screws

Max. permissible misalignment

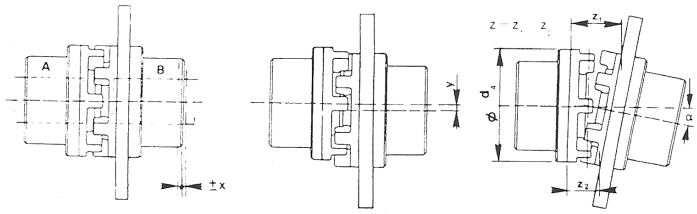

Measure Z_1 and Z_2 vertical and horizontal at a 180° turn. Angular and radial misalignment may be present simultaneously. In this case, the sum of the individual misalignments may not exceed the value of the net angular misalignment. Please refer to manual for alignment data.